FA25489T SERIES

Y.S. TECH

Ø 254x89mm

- **Airflow: 443.0~699.8 CFM**
- **Static Pressure: 6.87~8.39 mm-H_2O**
- **Blade:**
  Plastic Material UL 94V-0 P.B.T.
- **Frame:Die-Casting Aluminum**
- **Weight: 2000 g**

Model No.	Bearing	Rated Voltage VAC	Freq Hz	Speed RPM	Max. Airflow CFM	Max. Static Pressure mm-H_2O	Current A	Power Consumption W	Life at 65°C L10 Hour	P-Q Curve	Noise Level dB(A)
FA125489MBT-T	2B	115	50/60	1400/1600	443/518	6.87/8.39	0.22/0.24	34.0/37.0	40000	❷/❷	52.6/59.5
FA125489MBL-T	2B		50/60	1400/1600	443/518	6.87/8.39	0.22/0.24	34.0/37.0	40000	❷/❷	52.6/59.5
FA125489HBT-T	2B		50/60	2300/2200	700/620	8.90/6.80	0.55/0.62	60.0/67.0	40000	❶/❶	61.6/57.6
FA125489HBL-T	2B		50/60	2300/2200	700/620	8.90/6.80	0.55/0.62	60.0/67.0	40000	❶/❶	61.6/57.6
FA225489MBT-T	2B	230	50/60	1400/1600	443/518	6.87/8.39	0.16/0.14	34.0/37.0	40000	❷/❷	52.6/59.5
FA225489MBL-T	2B		50/60	1400/1600	443/518	6.87/8.39	0.16/0.14	34.0/37.0	40000	❷/❷	52.6/59.5
FA225489HBT-T	2B		50/60	2300/2200	700/620	8.90/6.80	0.26/0.30	60.0/67.0	40000	❶/❶	61.6/57.6
FA225489HBL-T	2B		50/60	2300/2200	700/620	8.90/6.80	0.26/0.30	60.0/67.0	40000	❶/❶	61.6/57.6

2B: 2-ball bearing S: sleeve bearing

Voltage Available
115 230

Bearing System Available
2B S

PERFORMANCE P-Q CURVE

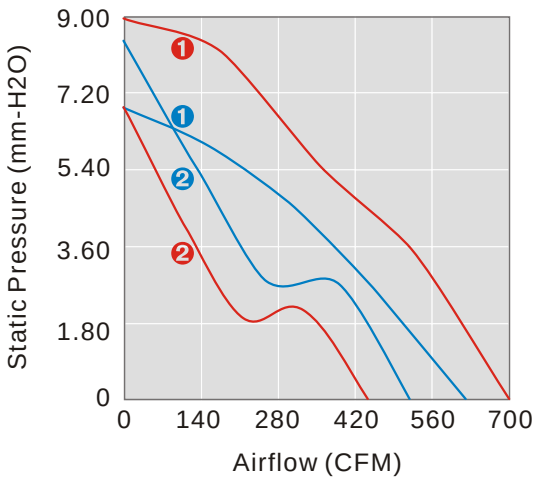

OUTLINE DIMENSIONS

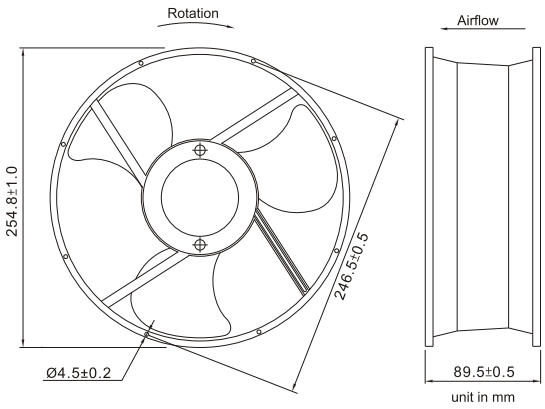

Please refer to *Model Numbering System* for bearing, function and speed level indication.
Specifications are subject to changes without notice. Please refer to the formally issued product specification via contacting Y.S. TECH sales department.
Visit Y.S. TECH web site at *http://www.ystech.com.tw* for updated information. Customized Specifications are designed accordingly