EC Centrifugal fans 離心扇 forward curved 前傾式, Φ 120

- **Material 材料**:
  Impeller 扇葉: Hot-dip galvanized sheet steel (SGCC) 熱浸鍍鋅鋼板
  Electronics housing 後蓋: Die-casting aluminum 壓鑄鋁合金
  Motor shell 馬達殼: Steel, electro deposited black 電著黑鋼材
- **Direction of rotation 轉動方向**: CW view toward rotor 看自入風口為順時針
- **Number of blades 葉片數:** 34
- **Degree of protection 防水防塵等級:** IP65
- **Mode of operating 操作模式:** Continuous operation S1 連續操作 S1
- **Insulation class 絕緣等級:** B
- **Installation position 安裝方向:** Any 任何

Outline dimension 外觀尺寸

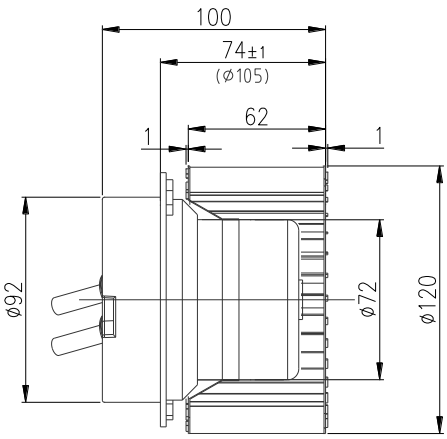

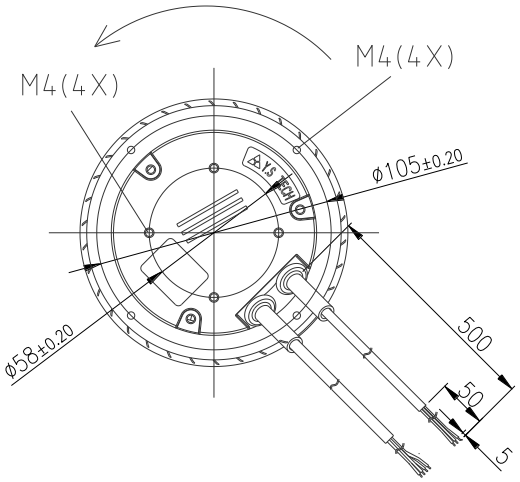

PQ 曲線為風扇入蝸殼量測所得
PQ curve was measured with scroll housing

Technical parameters 規格參數

Model name 機型編碼	WV212061HBL-7A2
Rated voltage 額定電壓(VAC)	230
Frequency 交流電頻率(Hz)	50/60
Current 電流(A)	0.95
Speed 轉速(RPM)	3,860
Power 功耗(W)	108
Max. airflow 最大風量(cfm)	279
Max. airflow 最大風量(m^3/h)	475
Max. static pressure 最大靜壓(inAQ)	3.94
Max. static pressure 最大靜壓(Pa)	984
Noise 噪音(dBA)	67.2
Operating temperature 操作溫度(°C)	-25~60
Weight 重量(g)	1,206
Speed control 速控模式	0~10VDC/PWM
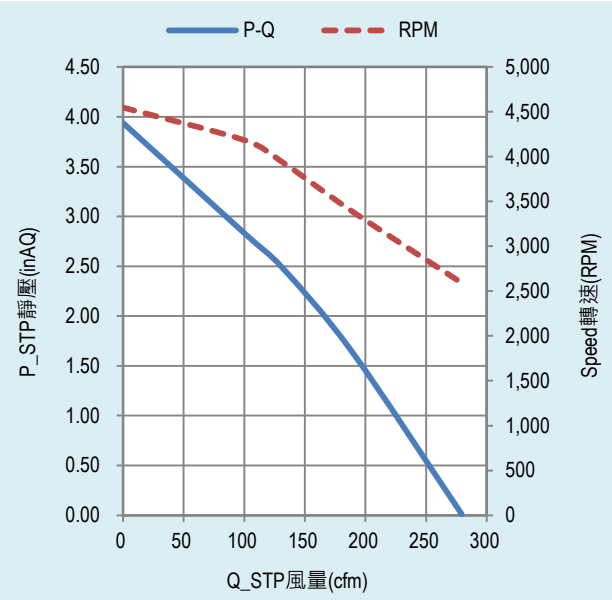
Performance curves 性能曲線