120x120x25mm

- **Airflow: 73.0~208.4 CFM**
- **Static Pressure: 2.6~18.0 mm-H_2O**
- **Blade / Housing:**
  Plastic Material UL 94V-0 P.B.T.
- **Lead Wire: UL1007 #22 AWG**
- **Weight: 160 g**

Model No.	Bearing	Rated Voltage	Operating Voltage Range	Speed	Max. Airflow	Max. Static Pressure	Current	Power Consumption	Life at 40°C L10	P-Q Curve	Noise Level
		VDC	VDC	RPM	CFM	mm-H_2O	mA	W	Hour		dB(A)
FD121225LB	2B	12	7~13.2	1800	73.0	2.6	180	2.16	80000	8	34.0
FD121225MB	2B		7~13.2	2200	87.8	3.9	290	3.48	80000	7	40.5
FD121225HB	2B		7~13.2	2600	106.1	5.8	460	5.52	75000	6	44.0
FD121225EB	2B		7~13.2	3000	123.1	7.6	570	6.84	65000	5	49.0
FD121225EB	2B		7~13.2	3500	144.6	8.4	650	7.80	65000	4	51.5
FD121225EB	2B		7~13.2	4100	169.5	12.0	950	11.40	65000	3	55.0
FD121225UB	2B		7~13.2	4600	190.2	16.2	1300	15.60	65000	2	57.5
FD121225SB	2B		7~13.2	5200	208.4	18.0	1900	22.80	60000	1	59.5
FD241225LB	2B	24	12~26.4	1800	73.0	2.6	100	2.40	80000	8	34.0
FD241225MB	2B		12~26.4	2200	87.8	3.9	160	3.84	80000	7	40.5
FD241225HB	2B		12~26.4	2600	106.1	5.8	280	6.72	75000	6	44.0
FD241225EB	2B		12~26.4	3500	144.6	8.4	380	9.12	65000	4	51.5
FD241225UB	2B		12~26.4	4600	190.2	16.2	660	15.84	65000	2	57.5
FD241225SB	2B		12~26.4	5200	208.4	18.0	1000	24.00	60000	1	59.5
FD481225LB	2B	48	24~56.0	1800	73.0	2.6	70	3.36	80000	8	34.0
FD481225MB	2B		24~56.0	2200	87.8	3.9	75	3.60	80000	7	40.5
FD481225HB	2B		24~56.0	2600	106.1	5.8	130	6.24	75000	6	44.0
FD481225EB	2B		24~56.0	3500	144.6	8.4	200	9.60	65000	4	51.5
FD481225UB	2B		24~56.0	4600	190.2	16.2	330	15.84	65000	2	57.5
FD481225SB	2B		24~56.0	5200	208.4	18.0	520	24.96	60000	1	59.5

2B: 2-ball bearing L: sintetico bearing S: sleeve bearing

Voltage Available
05 12 24 48

Bearing System Available
2B L S

Function Available
N A I F R Q S T M V C P D W U

PERFORMANCE P-Q CURVE

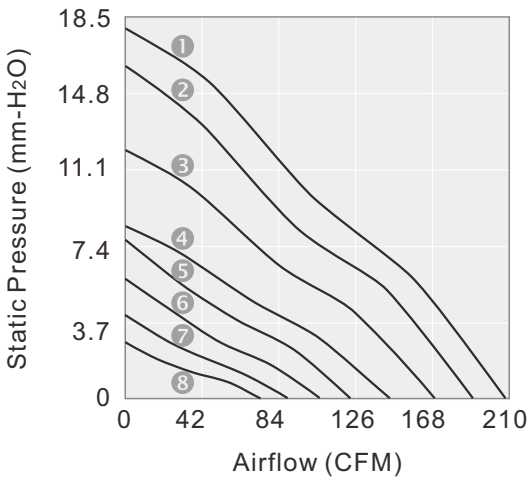

OUTLINE DIMENSIONS

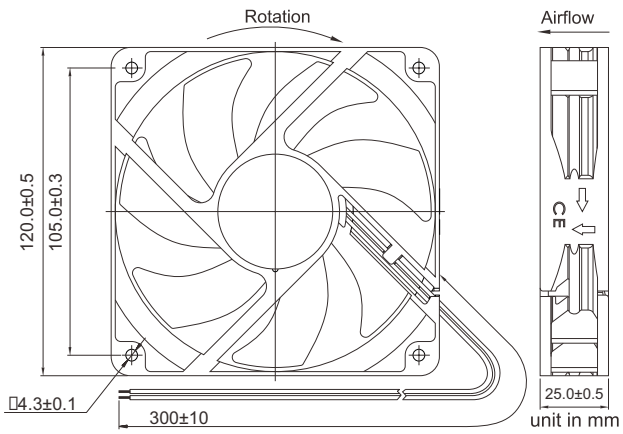

Please refer to *Model Numbering System* for bearing, function and speed level indication.
Specifications are subject to changes without notice. Please refer to the formally issued product specification via contacting Y.S. TECH sales department.
Visit Y.S. TECH web site at *http://www.ystech.com.tw* for updated information. Customized Specifications are designed accordingly