120x120x38mm

- **Airflow: 89.5~212.6 CFM**
- **Static Pressure: 3.9~19.8 mm-H_2O**
- **Blade / Housing:**
  Plastic Material UL 94V-0 P.B.T.
- **Lead Wire: UL1007 #22 AWG**
- **Weight: 220 g**

Model No.	Bearing	Rated Voltage VDC	Operating Voltage Range VDC	Speed RPM	Max. Airflow CFM	Max. Static Pressure mm-H_2O	Current mA	Power Consumption W	Life at 40°C L10 Hour	P-Q Curve	Noise Level dB(A)
FD121238LB	2B		7~13.2	2000	89.5	3.9	320	3.84	80000	7	36.0
FD121238MB	2B		7~13.2	2400	107.0	5.8	400	4.80	80000	6	41.0
FD121238HB	2B		7~13.2	2800	125.5	7.6	660	7.92	75000	5	45.0
FD121238EB	2B	12	7~13.2	3000	135.0	8.6	830	9.96	65000	4	47.0
FD121238EB	2B		7~13.2	3500	161.1	10.4	750	9.00	65000	3	55.5
FD121238EB	2B		7~13.2	4100	189.2	15.1	1250	15.00	65000	2	59.0
FD121238UB	2B		7~13.2	4600	212.6	19.8	1750	21.00	65000	1	61.5
FD241238LB	2B		12~26.4	2000	89.5	3.9	150	3.60	80000	7	36.0
FD241238MB	2B		12~26.4	2400	107.0	5.8	250	6.00	80000	6	41.0
FD241238HB	2B		12~26.4	2800	125.5	7.6	310	7.44	75000	5	45.0
FD241238EB	2B	24	12~26.4	3000	135.0	8.6	410	9.84	65000	4	47.0
FD241238EB	2B		12~26.4	3500	161.1	10.4	410	9.84	75000	3	55.5
FD241238EB	2B		12~26.4	4100	189.2	15.1	620	14.88	65000	2	59.0
FD241238UB	2B		12~26.4	4600	212.6	19.8	860	20.64	65000	1	61.5
FD481238LB	2B		24~56.0	2000	89.5	3.9	120	5.76	80000	7	36.0
FD481238MB	2B		24~56.0	2400	107.0	5.8	140	6.72	80000	6	41.0
FD481238HB	2B		24~56.0	2800	125.5	7.6	180	8.64	75000	5	45.0
FD481238EB	2B	48	24~56.0	3000	135.0	8.6	210	10.08	65000	4	47.0
FD481238EB	2B		24~56.0	3500	161.1	10.4	240	11.52	65000	3	55.5
FD481238EB	2B		24~56.0	4100	189.2	15.1	340	16.32	65000	2	59.0
FD481238UB	2B		24~56.0	4600	212.6	19.8	470	22.56	60000	1	61.5

2B: 2-ball bearing L: sintetico bearing S: sleeve bearing

Voltage Available
05 12 24 48

Bearing System Available
2B L S

Function Available
N A I F R Q S T M V C P D W U

PERFORMANCE P-Q CURVE

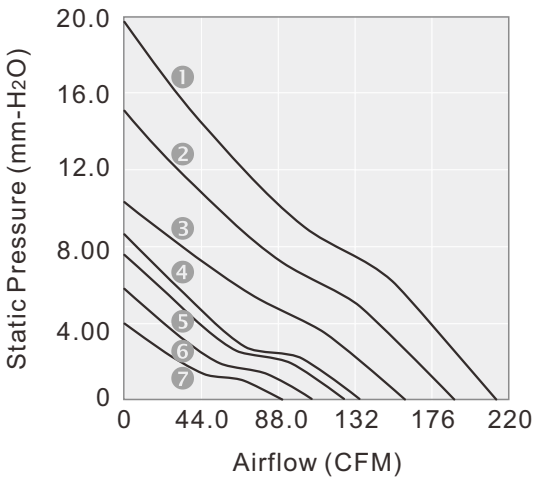

OUTLINE DIMENSIONS

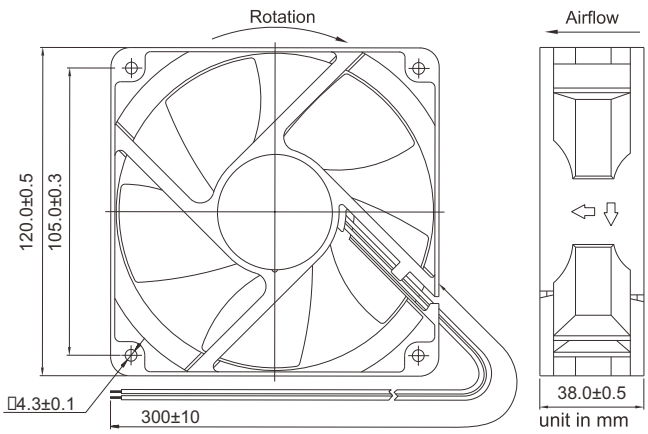

Please refer to *Model Numbering System* for bearing, function and speed level indication.
Specifications are subject to changes without notice. Please refer to the formally issued product specification via contacting Y.S. TECH sales department.
Visit Y.S. TECH web site at *http://www.ystech.com.tw* for updated information. Customized Specifications are designed accordingly