# FD1238-R SERIES

Y.S. TECH

## 119x119x38.5mm

- **Airflow: 88.0~174.7 CFM**
- **Static Pressure: 8.4~28.9 mm-$H_2O$**
- **Blade / Housing:**
  **Plastic Material UL 94V-0 P.B.T.**
- **Lead Wire: UL1007 #22 AWG**
- **Weight: 250.0 g**

| Model No. | Bearing | Rated Voltage | Operating Voltage Range | Speed | Max. Airflow | Max. Static Pressure | Current | Power Consumption | Life at 40°C L10 | P-Q Curve | Noise Level |
|---|---|---|---|---|---|---|---|---|---|---|---|
| | | VDC | VDC | RPM | CFM | mm-$H_2O$ | mA | W | Hour | | dB(A) |
| FD121238LB-R | 2B | 12 | 7~13.2 | 2800 | 88.0 | 8.4 | 270 | 3.24 | 80000 | 6 | 45.5 |
| FD121238MB-R | 2B | | 7~13.2 | 3200 | 100.9 | 10.5 | 380 | 4.56 | 80000 | 5 | 47.0 |
| FD121238HB-R | 2B | | 7~13.2 | 3600 | 113.9 | 13.0 | 520 | 6.24 | 75000 | 4 | 51.0 |
| FD121238EB-R | 2B | | 7~13.2 | 4000 | 127.0 | 16.0 | 730 | 8.76 | 65000 | 3 | 55.0 |
| FD121238EB-R | 2B | | 7~13.2 | 4500 | 142.0 | 20.0 | 980 | 11.76 | 65000 | 2 | 58.5 |
| FD241238LB-R | 2B | 24 | 12~26.4 | 2800 | 88.0 | 8.4 | 145 | 3.48 | 80000 | 6 | 45.5 |
| FD241238MB-R | 2B | | 12~26.4 | 3200 | 100.9 | 10.5 | 195 | 4.68 | 80000 | 5 | 47.0 |
| FD241238HB-R | 2B | | 12~26.4 | 3600 | 113.9 | 13.0 | 270 | 6.48 | 75000 | 4 | 51.0 |
| FD241238EB-R | 2B | | 12~26.4 | 4000 | 127.0 | 16.0 | 370 | 8.88 | 65000 | 3 | 55.0 |
| FD241238EB-R | 2B | | 12~26.4 | 4500 | 142.0 | 20.0 | 520 | 12.48 | 65000 | 2 | 58.5 |
| FD481238LB-R | 2B | 48 | 24~56.0 | 2800 | 88.0 | 8.4 | 100 | 4.80 | 80000 | 6 | 45.5 |
| FD481238MB-R | 2B | | 24~56.0 | 3200 | 100.9 | 10.5 | 130 | 6.24 | 80000 | 5 | 47.0 |
| FD481238HB-R | 2B | | 24~56.0 | 3600 | 113.9 | 13.0 | 170 | 8.16 | 75000 | 4 | 51.0 |
| FD481238EB-R | 2B | | 24~56.0 | 4000 | 127.0 | 16.0 | 200 | 9.60 | 65000 | 3 | 55.0 |
| FD481238EB-R | 2B | | 24~56.0 | 4500 | 142.0 | 20.0 | 270 | 12.96 | 65000 | 2 | 58.5 |
| FD481238EB-R | 2B | | 24~56.0 | 5500 | 174.7 | 28.9 | 560 | 26.88 | 65000 | 1 | 65.0 |

2B: 2-ball bearing L: sintetico bearing S: sleeve bearing

**Voltage Available**
05 **12** **24** **48**

**Bearing System Available**
**2B** L S

**Function Available**
N A **I** **F** R Q S **T** M V C **P** D W U

### *PERFORMANCE P-Q CURVE*

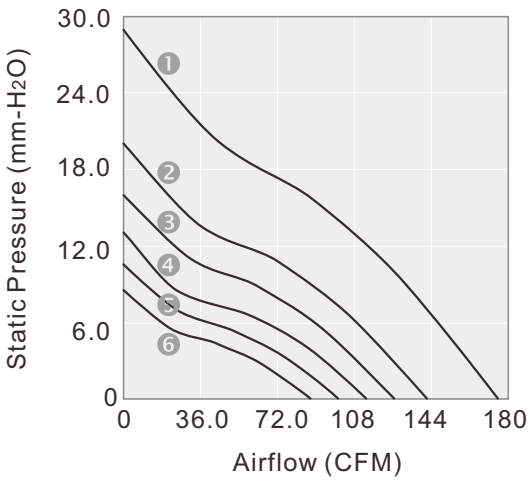


### *OUTLINE DIMENSIONS*

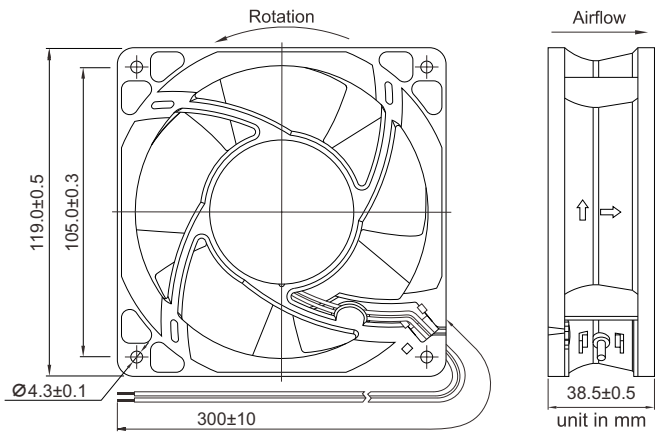


Please refer to *Model Numbering System* for bearing, function and speed level indication.
Specifications are subject to changes without notice. Please refer to the formally issued product specification via contacting Y.S. TECH sales department.
Visit Y.S. TECH web site at *http://www.ystech.com.tw* for updated information. Customized Specifications are designed accordingly