FD1751 SERIES

Y.S. TECH

172x150x51mm

- **Airflow: 247.5~464.0 CFM**
- **Static Pressure: 16.7~52.0 mm-H_2O**
- **Blade / Housing:**
  Plastic Material UL 94V-0 P.P.O.
  Frame:Die-Casting Aluminum
- **Lead Wire: UL1007 #22 AWG**
- **Weight: 1080 g**

Model No.	Bearing	Rated Voltage	Operating Voltage Range	Speed	Max. Airflow	Max. Static Pressure	Current	Power Consumption	Life at 40°C L10	P-Q Curve	Noise Level
		VDC	VDC	RPM	CFM	mm-H_2O	mA	W	Hour		dB(A)
FD121751LB	2B	12	7~13.2	3000	247.5	16.7	1800	21.60	80000	6	57.2
FD121751MB	2B		7~13.2	3500	294.4	23.7	2800	33.60	80000	5	62.1
FD241751LB	2B	24	12~26.4	3000	247.5	16.7	850	20.40	80000	6	57.2
FD241751MB	2B		12~26.4	3500	294.4	23.7	1250	30.00	80000	5	62.1
FD241751HB	2B		12~26.4	4000	335.4	29.8	1850	40.40	75000	4	63.0
FD241751EB	2B		12~26.4	4500	379.7	37.1	2700	64.80	65000	3	67.3
FD481751LB	2B	48	24~56.0	3000	247.5	16.7	440	21.12	80000	6	57.2
FD481751MB	2B		24~56.0	3500	294.4	23.7	650	31.20	80000	5	62.1
FD481751HB	2B		24~56.0	4000	335.4	29.8	950	45.60	75000	4	63.0
FD481751EB	2B		24~56.0	4500	379.7	37.1	1250	60.00	65000	3	67.3
FD481751EB	2B		24~56.0	5000	419.9	46.3	1650	79.20	65000	2	71.1
FD481751EB	2B		24~56.0	5500	464.0	52.0	2400	115.2	65000	1	73.1

2B: 2-ball bearing L: sintetico bearing S: sleeve bearing

Voltage Available
05 **12** **24** **48**

Bearing System Available
2B L S

Function Available
N A **I** **F** **R** Q S **T** **M** V C P D **W** **U**

PERFORMANCE P-Q CURVE

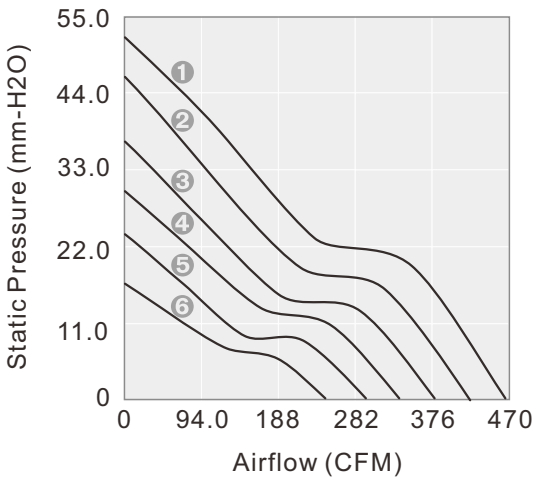

OUTLINE DIMENSIONS

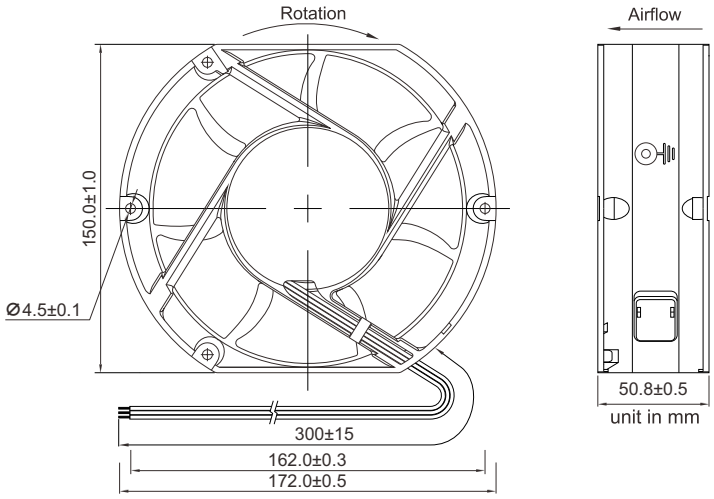

Please refer to *Model Numbering System* for bearing, function and speed level indication.
Specifications are subject to changes without notice. Please refer to the formally issued product specification via contacting Y.S. TECH sales department.
Visit Y.S. TECH web site at *http://www.ystech.com.tw* for updated information. Customized Specifications are designed accordingly.