FA17251T SERIES

Y.S. TECH

172x150x51mm

- **Airflow: 190.0~223.0 CFM**
- **Static Pressure: 15.0~19.0 mm-H2O**
- **Blade:**
  Plastic Material UL 94V-0 P.B.T.
- **Frame:Die-Cast Aluminum**
- **Weight: 1050 g**

Model No.	Bearing	Rated Voltage	Freq	Speed	Max. Airflow	Max. Static Pressure	Current	Power Consumption	Life at 25°C L10	P-Q Curve	Noise Level
		VAC	Hz	RPM	CFM	mm-H_2O	A	W	Hour		dB(A)
FA117251HBT-T	2B	115	50/60	2600/3000	190/223	15.0/19.0	0.24/0.25	24.0/28.0	60000	1/1	56.6/60.6
FA117251HBL-T	2B		50/60	2600/3000	190/223	15.0/19.0	0.24/0.25	24.0/28.0	60000	1/1	56.6/60.6
FA217251HBT-T	2B	230	50/60	2600/3000	190/223	15.0/19.0	0.12/0.16	24.0/28.0	60000	1/1	56.6/60.6
FA217251HBL-T	2B		50/60	2600/3000	190/223	15.0/19.0	0.12/0.16	24.0/28.0	60000	1/1	56.6/60.6

2B: 2-ball bearing S: sleeve bearing

Voltage Available
115 230

Bearing System Available
2B S

PERFORMANCE P-Q CURVE

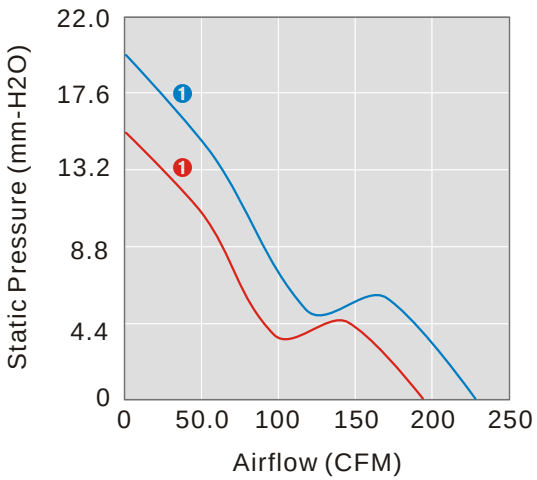

OUTLINE DIMENSIONS

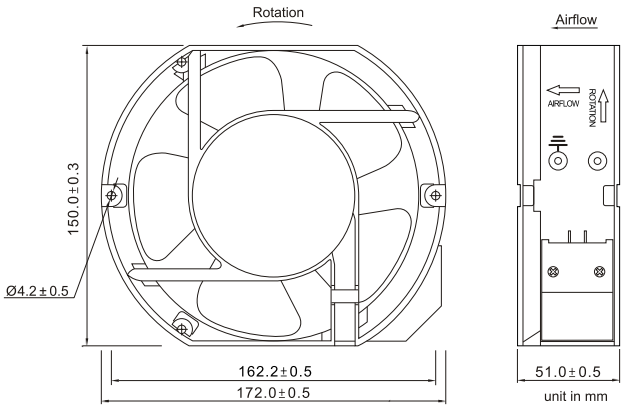

Please refer to *Model Numbering System* for bearing, function and speed level indication.
Specifications are subject to changes without notice. Please refer to the formally issued product specification via contacting Y.S. TECH sales department.
Visit Y.S. TECH web site at *http://www.ystech.com.tw* for updated information. Customized Specifications are designed accordingly