FD1238-E SERIES

Y.S. TECH

120x120x38mm

- Airflow: 155.8~275.9 CFM
- Static Pressure: 19.3~60.4 mm-H_2O
- Blade / Housing:
  Plastic Material UL 94V-0 P.B.T.
- Lead Wire: UL1007 #22 AWG
- Weight: 425 g

Model No.	Bearing	Rated Voltage	Operating Voltage Range	Speed	Max. Airflow	Max. Static Pressure	Current	Power Consumption	Life at 40°C L10	P-Q Curve	Noise Level
		VDC	VDC	RPM	CFM	mm-H_2O	mA	W	Hour		dB(A)
FD121238LB-E	2B	12	7~13.2	4000	155.8	19.3	1200	14.40	80000	4	54.0
FD121238MB-E	2B		7~13.2	5000	194.0	30.8	2200	26.40	75000	3	60.4
FD121238HB-E	2B		7~13.2	6000	236.4	48.1	3500	42.00	65000	2	64.9
FD241238LB-E	2B	24	12~30.0	4000	155.8	19.3	680	16.32	80000	4	54.0
FD241238MB-E	2B		12~30.0	5000	194.0	30.8	950	22.80	75000	3	60.4
FD241238HB-E	2B		12~30.0	6000	235.4	41.5	1700	40.80	65000	2	64.9
FD241238EB-E	2B		12~30.0	7000	275.9	60.4	2700	64.80	65000	1	69.2
FD481238LB-E	2B	48	35~60.0	4000	155.8	19.3	370	17.76	80000	4	54.0
FD481238MB-E	2B		35~60.0	5000	194.0	30.8	550	26.40	75000	3	60.4
FD481238HB-E	2B		35~60.0	6000	235.4	41.5	800	38.40	65000	2	64.9
FD481238EB-E	2B		35~60.0	7000	275.9	60.4	1300	62.40	65000	1	69.2

2B: 2-ball bearing L: sintetico bearing S: sleeve bearing

Voltage Available
05 **12** **24** **48**

Bearing System Available
2B L S

Function Available
N A **I** **F** **R** **Q** S T M V C P D **W** U

PERFORMANCE P-Q CURVE

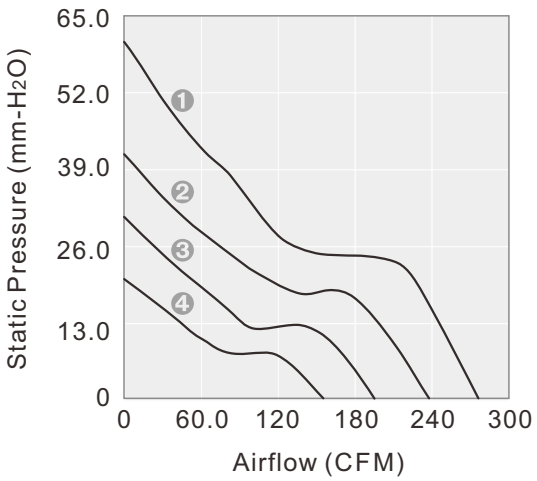

OUTLINE DIMENSIONS

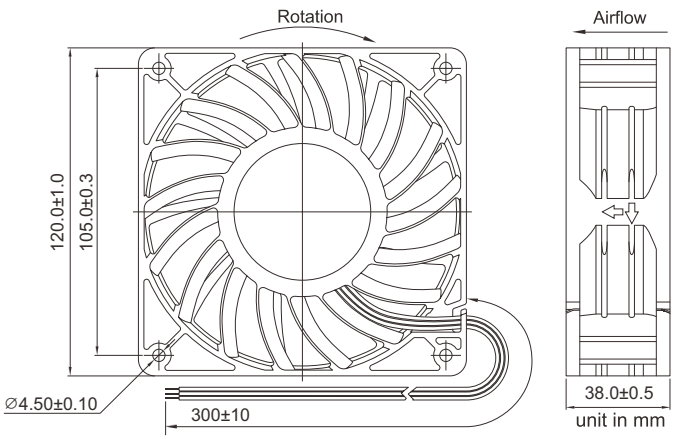

Please refer to *Model Numbering System* for bearing, function and speed level indication.
Specifications are subject to changes without notice. Please refer to the formally issued product specification via contacting Y.S. TECH sales department.
Visit Y.S. TECH web site at *http://www.ystech.com.tw* for updated information. Customized Specifications are designed accordingly