FD1238-Q SERIES

Y.S. TECH

120x120x38mm

- Airflow: 77.9~200.7 CFM
- Static Pressure: 3.6~20.6mm-H_2O
- Blade / Housing:
  Plastic Material UL 94V-0 P.B.T.
- Lead Wire: UL1007 #24 AWG
- Weight: 276 g

Model No.	Bearing	Rated Voltage VDC	Operating Voltage Range VDC	Speed RPM	Max. Airflow CFM	Max. Static Pressure mm-H_2O	Current mA	Power Consumption W	Life at 40°C L10 Hour	P-Q Curve	Noise Level dB(A)
FD121238LB-Q	2B	12	7~13.2	2000	77.9	3.6	150	1.80	80000	4	31.4
FD121238MB-Q	2B		7~13.2	3000	115.3	7.4	330	3.96	80000	3	43.3
FD121238HB-Q	2B		7~13.2	4000	158.1	13.3	750	9.00	75000	2	52.0
FD121238EB-Q	2B		7~13.2	5000	200.7	20.6	1600	19.20	65000	1	57.4
FD241238LB-Q	2B	24	12~26.4	2000	77.9	3.6	100	2.40	80000	4	31.4
FD241238MB-Q	2B		12~26.4	3000	115.3	7.4	200	4.80	80000	3	43.3
FD241238HB-Q	2B		12~26.4	4000	158.1	13.3	360	8.64	75000	2	52.0
FD241238EB-Q	2B		12~26.4	5000	200.7	20.6	750	18.00	65000	1	57.4
FD481238LB-Q	2B	48	24~56.0	2000	77.9	3.6	70	3.36	80000	4	31.4
FD481238MB-Q	2B		24~56.0	3000	115.3	7.4	120	5.76	80000	3	43.3
FD481238HB-Q	2B		24~56.0	4000	158.1	13.3	200	9.60	75000	2	52.0
FD481238EB-Q	2B		24~56.0	5000	200.7	20.6	380	18.24	65000	1	57.4

2B: 2-ball bearing L: sintetico bearing S: sleeve bearing

Voltage Available
05 **12** **24** **48**

Bearing System Available
2B L S

Function Available
N A **I** **F** **R** **Q** S T M V C P D **W** U

PERFORMANCE P-Q CURVE

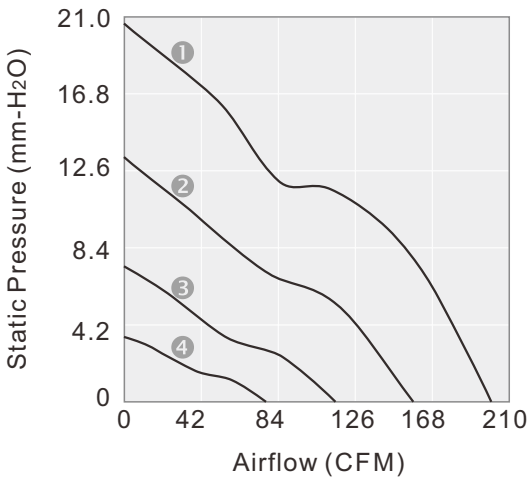

OUTLINE DIMENSIONS

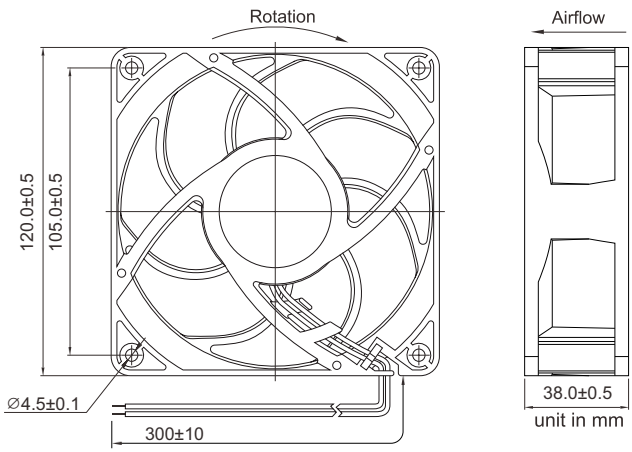

Please refer to *Model Numbering System* for bearing, function and speed level indication.
Specifications are subject to changes without notice. Please refer to the formally issued product specification via contacting Y.S. TECH sales department.
Visit Y.S. TECH web site at *http://www.ystech.com.tw* for updated information. Customized Specifications are designed accordingly