FD8038-E SERIES

Y.S. TECH

80x80x38mm

- **Airflow: 55.2~135.0 CFM**
- **Static Pressure: 23.3~145.0 mm-H_2O**
- **Blade / Housing:**
  Plastic Material UL 94V-0 P.B.T.
- **Lead Wire: UL1061 #22 AWG**
- **Weight: 220.0 g**

Model No.	Bearing	Rated Voltage	Operating Voltage Range	Speed	Max. Airflow	Max. Static Pressure	Current	Power Consumption	Life at 40°C L10	P-Q Curve	Noise Level
		VDC	VDC	RPM	CFM	mm-H_2O	mA	W	Hour		dB(A)
FD128038LB-E	2B	12	7~14.0	7000	55.2	23.3	550	6.60	80000	5	50.0
FD128038MB-E	2B		7~14.0	9000	70.9	39.6	950	11.40	80000	4	56.0
FD128038HB-E	2B		7~14.0	11000	87.1	63.0	1550	18.60	75000	3	60.8
FD128038EB-E	2B		7~14.0	14000	111.6	102.1	2900	34.80	65000	2	67.5
FD128038UB-E	2B		7~14.0	17000	135.0	145.0	4800	57.60	65000	1	69.5
FD248038LB-E	2B	24	10~30.0	7000	55.2	23.3	320	7.68	80000	5	50.0
FD248038MB-E	2B		10~30.0	9000	70.9	39.6	470	11.28	80000	4	56.0
FD248038HB-E	2B		10~30.0	11000	87.1	63.0	730	16.80	75000	3	60.8
FD248038EB-E	2B		10~30.0	14000	111.6	102.1	1300	31.20	65000	2	67.5
FD248038UB-E	2B		10~30.0	17000	135.0	145.0	2300	55.20	65000	1	69.5
FD488038LB-E	2B	48	24~75.0	7000	55.2	23.3	200	9.60	80000	5	50.0
FD488038MB-E	2B		24~75.0	9000	70.9	39.6	270	12.96	80000	4	56.0
FD488038HB-E	2B		24~75.0	11000	87.1	63.0	360	17.28	75000	3	60.8
FD488038EB-E	2B		24~75.0	14000	111.6	102.1	700	33.60	65000	2	67.5
FD488038UB-E	2B		24~75.0	17000	135.0	145.0	1200	57.60	65000	1	69.5

2B: 2-ball bearing L: sintetico bearing S: sleeve bearing

Voltage Available
05 **12** **24** **48**

Bearing System Available
2B L S

Function Available
N A **I** **F** **R** Q S T M V C P D **W** U

PERFORMANCE P-Q CURVE

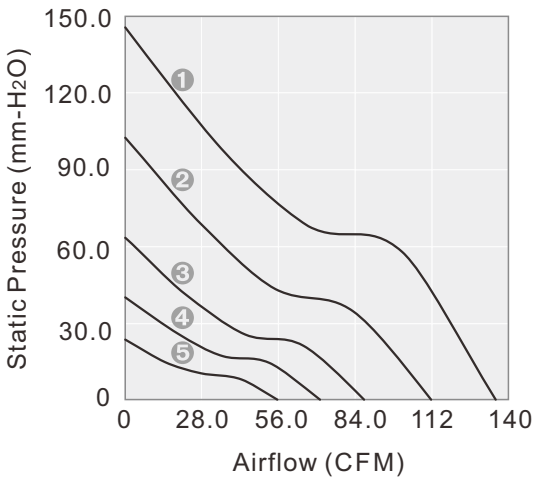

OUTLINE DIMENSIONS

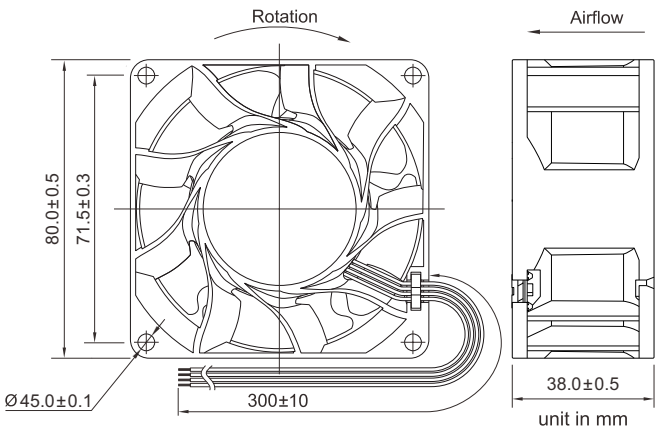

Please refer to *Model Numbering System* for bearing, function and speed level indication.
Specifications are subject to changes without notice. Please refer to the formally issued product specification via contacting Y.S. TECH sales department.
Visit Y.S. TECH web site at *http://www.ystech.com.tw* for updated information. Customized Specifications are designed accordingly