FD9238-E SERIES

Y.S. TECH

92x92x38mm

- **Airflow: 56.6~192.9 CFM**
- **Static Pressure: 13.2~103.7 mm-H_2O**
- **Blade / Housing:**
  Plastic Material UL 94V-0 P.B.T.
- **Lead Wire: UL1061 #22 AWG**
- **Weight: 233.0 g**

Model No.	Bearing	Rated Voltage	Operating Voltage Range	Speed	Max. Airflow	Max. Static Pressure	Current	Power Consumption	Life at 40°C L10	P-Q Curve	Noise Level
		VDC	VDC	RPM	CFM	mm-H_2O	mA	W	Hour		dB(A)
FD129238LB-E	2B	12	7~14.0	4000	56.6	13.2	240	2.88	80000	5	39.5
FD129238MB-E	2B		7~14.0	6000	84.6	29.1	570	6.84	80000	4	51.5
FD129238HB-E	2B		7~14.0	8000	113.6	48.9	1100	13.20	75000	3	57.5
FD129238EB-E	2B		7~14.0	10500	150.9	66.9	2400	28.80	65000	2	65.0
FD129238UB-E	2B		7~14.0	12500	184.5	79.0	4400	52.80	65000	1	67.5
FD249238LB-E	2B	24	10~30.0	4000	56.6	13.2	160	3.84	80000	5	39.5
FD249238MB-E	2B		10~30.0	6000	84.6	29.1	300	7.20	80000	4	51.5
FD249238HB-E	2B		10~30.0	8000	113.6	48.9	530	12.72	75000	3	57.5
FD249238EB-E	2B		10~30.0	10500	150.9	66.9	1050	25.20	65000	2	65.0
FD249238UB-E	2B		10~30.0	13500	192.9	103.7	2200	52.80	65000	1	68.5
FD489238LB-E	2B	48	24~75.0	4000	56.6	13.2	80	3.84	80000	5	39.5
FD489238MB-E	2B		24~75.0	6000	84.6	29.1	150	7.20	80000	4	51.5
FD489238HB-E	2B		24~75.0	8000	113.6	48.9	270	12.96	75000	3	57.5
FD489238EB-E	2B		24~75.0	10500	150.9	66.9	540	25.92	65000	2	65.0
FD489238UB-E	2B		24~75.0	13500	192.9	103.7	1100	52.80	65000	1	68.5

2B: 2-ball bearing L: sintetico bearing S: sleeve bearing

Voltage Available
05 **12** **24** **48**

Bearing System Available
2B L S

Function Available
N A **I** **F** **R** Q S T M V C P D **W** U

PERFORMANCE P-Q CURVE

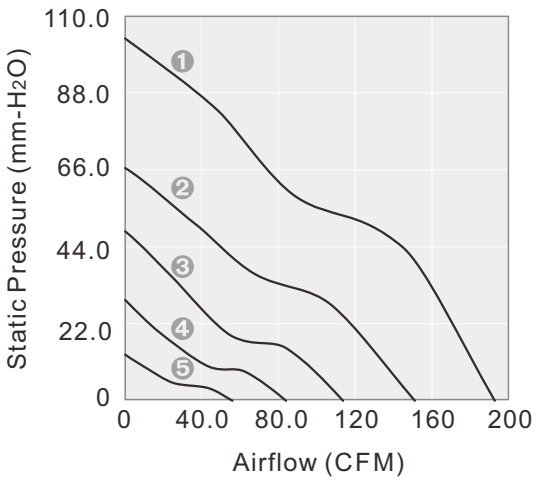

OUTLINE DIMENSIONS

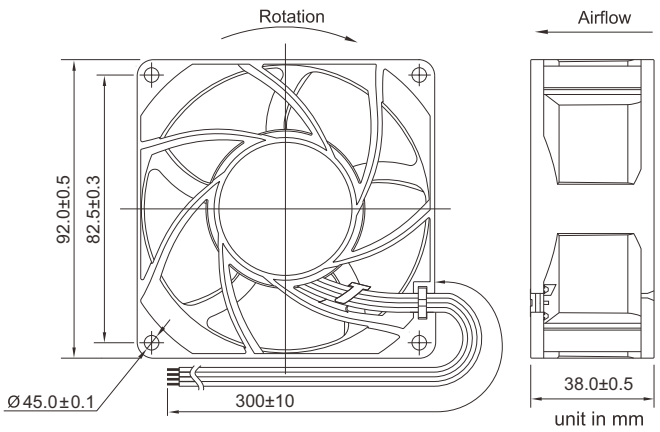

Please refer to *Model Numbering System* for bearing, function and speed level indication.
Specifications are subject to changes without notice. Please refer to the formally issued product specification via contacting Y.S. TECH sales department.
Visit Y.S. TECH web site at *http://www.ystech.com.tw* for updated information. Customized Specifications are designed accordingly