Heat Sink & Thermal Model

We are professional in:

「High Precision Machinery」

「Multi-Assembly & Flexibility Manufacture」

「Surface Coating & Coloring」

Technical Support

1. System-Based Thermal & Flow Analysis Simulation.
2. Thermal Resistant & Flow Testing
3. Acoustic Analysis & Testing
4. CMM Measurement & Analysis
5. Precision Machining(Tolerance Rage : IT6~IT8)
6. Soldering Technology
7. Thermal Components Integration & Assembly
8. Coating, Plating & Anodizing

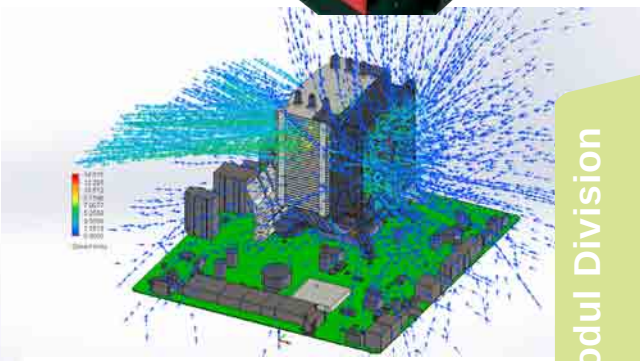

Product Application

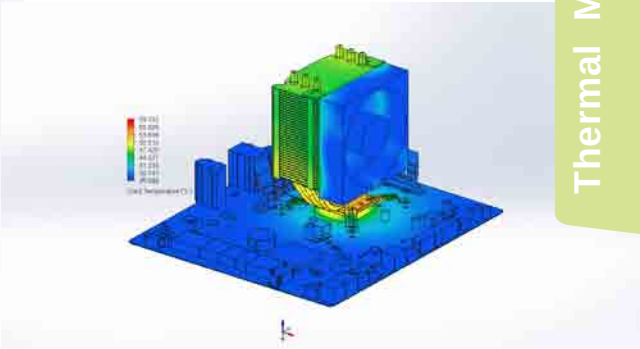

Thermal Modul Division

Process and Material

Aluminum Extrusion
AL 6063、AL 6061

Die-Casting
ADC12、ADC10、A380

Punching
AL 1050、AL 1100
CU 1100

Soldering
Copper - Copper,
Copper - Aluminum,
Aluminum - Aluminum

Skiving
AL 6063
CU 1100

CNC
AL 6063、AL 6061、ADC10、ADC12、A380
CU 1100

Surface Finishing

Mechanical surface finishing
Sand blasting

Hairline finishing

Chemical surface finishing
Aluminum Anodizing

Electro-less Nickel Plating

Anti-oxidation

Chromate

High Precision Machinery

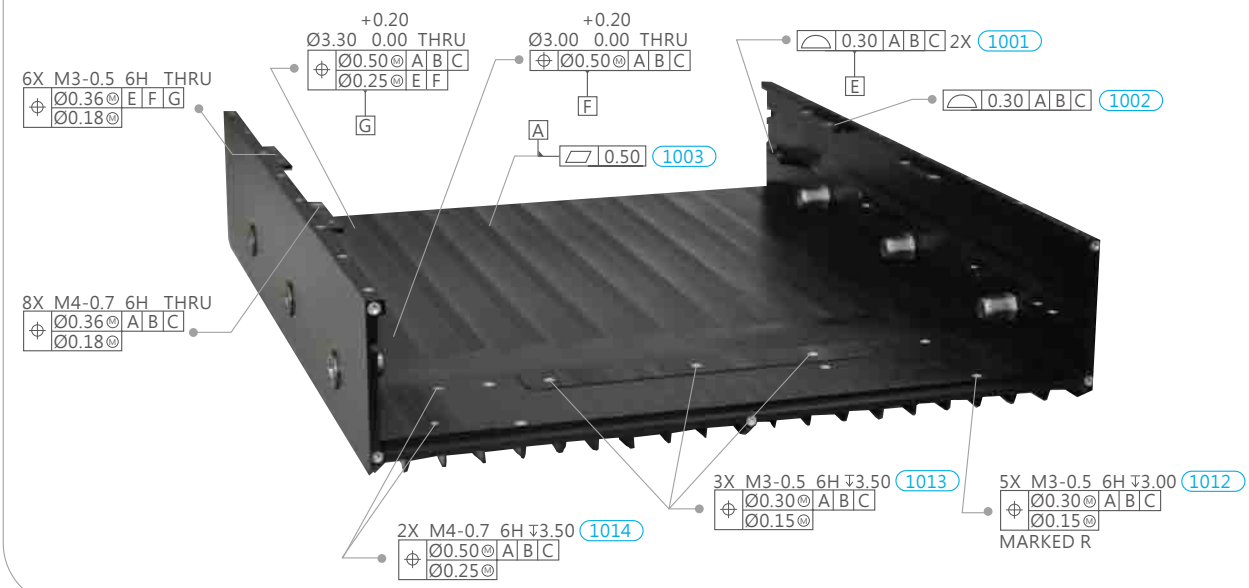

The thermal modules and heatsink series are all customized design and manufacture. Please write down your specification and demand by the email address:ystech@ystech.com.tw or visit Y.S. Tech website, leave your information to us. We will contact with you as soon.